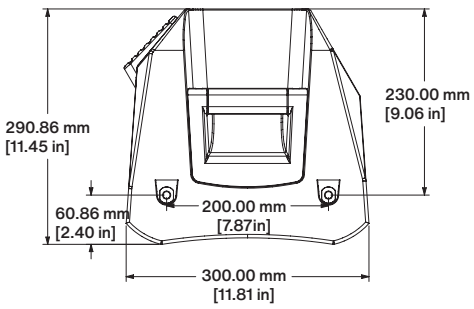

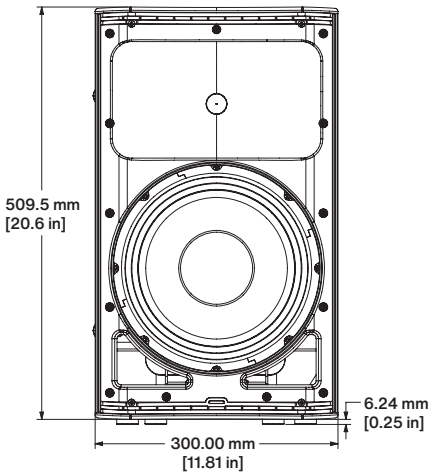

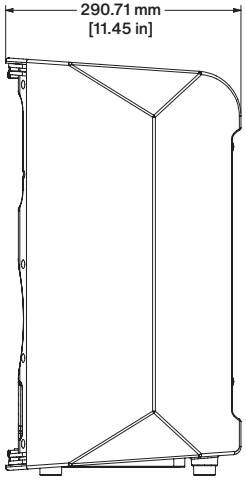

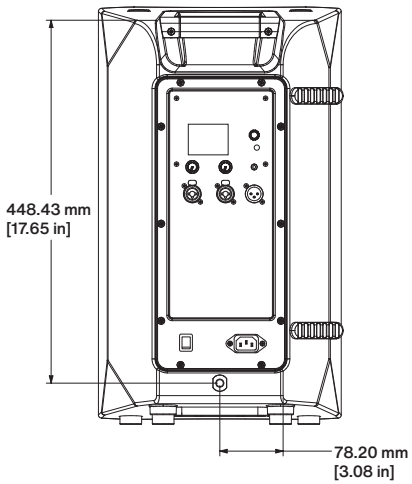

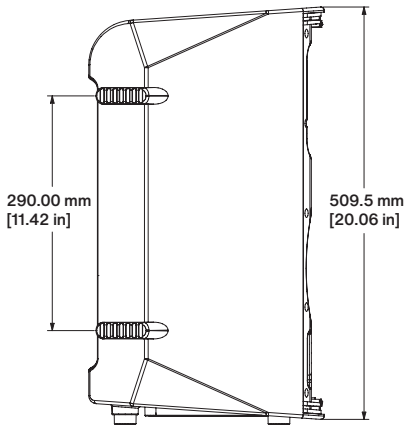

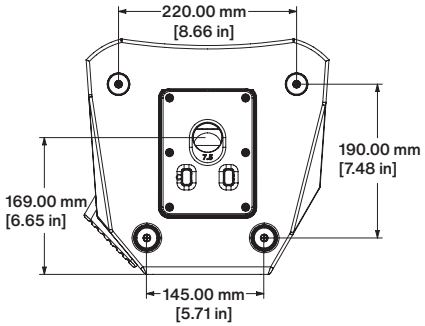

NOTE:
1. GRILLE REMOVED FOR CLARITY
2. TWO (2) RIGGING POINTS ON TOP (M10)
3. ONE (1) RIGGING POINT ON BACK (M10)

AIR XD 10

AIR XD 10 DIMENSIONS