StudioLive® Series III

Stagebox and Monitor Mixer Modes Addendum

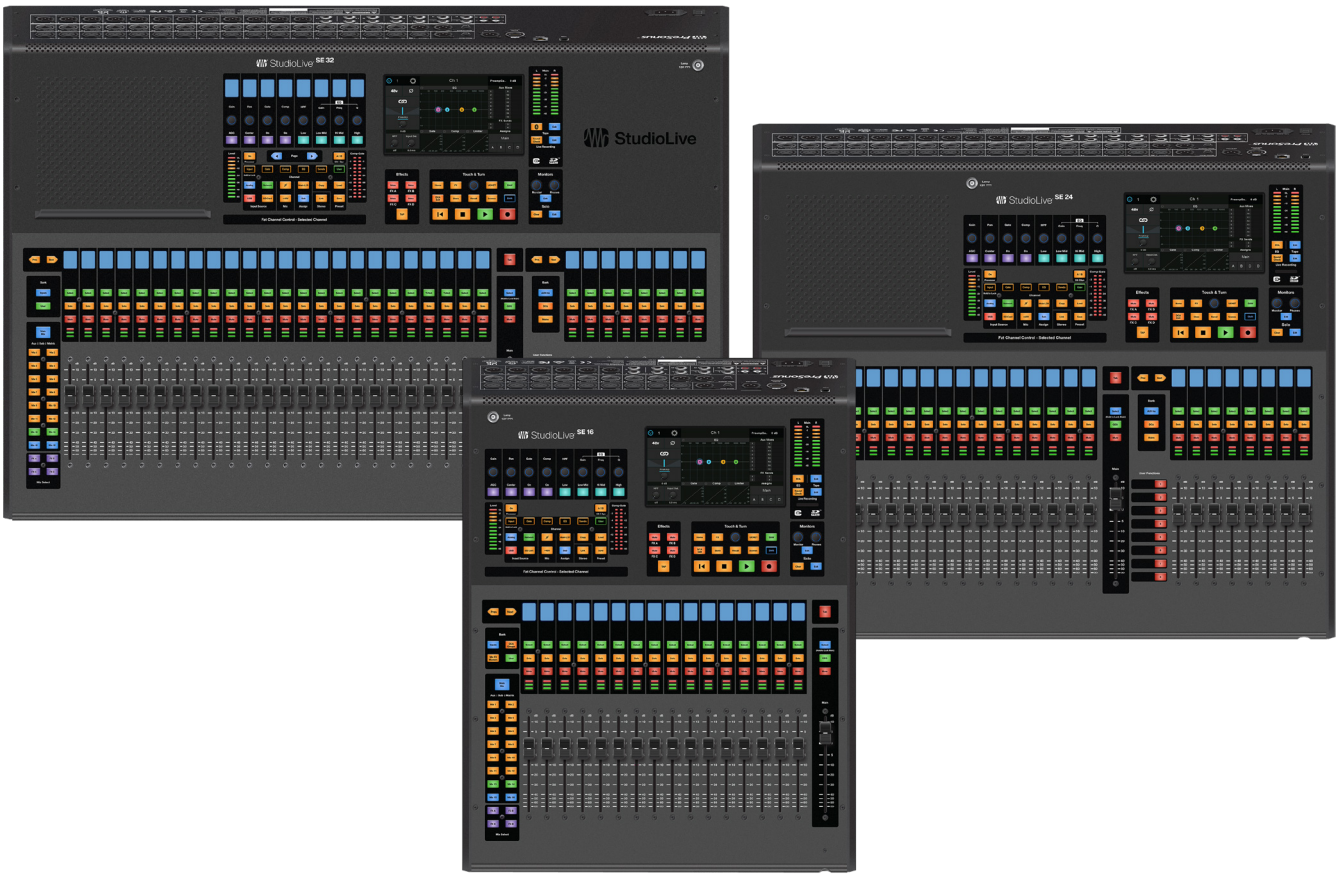

PreSonus®

www.presonus.com

1 Introduction

StudioLive Series III rackmount mixers can be used as digital stage boxes for any StudioLive Series III console mixer either while using the onboard DSP for monitors or bypassing the DSP entirely. This guide will get you up and running.

Important: *Both StudioLive Series III mixers must be updated with the latest firmware before configuring either Monitor Mixer or Stagebox mode. Firmware updates and instructions are available from within your My PreSonus user account. Please verify that the latest firmware is loaded on both mixers before proceeding.*

What you will need:

- StudioLive Series III console (StudioLive SE 32, SE 24, SE 16, 64S, 32S, 32SX, 32SC, 32, 24, or 16) with the latest firmware update
- StudioLive Series III rackmount mixer (StudioLive SE 32R, SE 24R, SE 16R, 32R, 24R, or 16R) with the latest firmware update
- Ethernet cable
- AVB switch (optional)

1.1 Modes

StudioLive Series III rack mixers have three different modes of operation when connected as a stage box to a StudioLive Series III console mixer.

Whichever mode is selected, preset and scene store and recall are independent on each mixer. In other words, saving a scene or a preset on the console mixer will not save the settings on the rack mixer and vice versa.

Stand-alone

When “Stand-alone” is selected, the console and rack mixers will retain their AVB input connectivity (i.e., all the inputs from the rack mixer will be available on the console mixer and vice versa), but each mixer will source its Main Left/Right and FlexMixes locally, and preamp control will not be available for the rack mixer from the top panel of the console mixer

Stagebox

This is a more traditional stage box function, where the StudioLive Series III rackmount mixer simply serves as a remote I/O box for the StudioLive Series III console at FOH, functioning just as an NSB-series network stagebox would. All mixing, both FOH and Aux mixing, is done on the StudioLive Series III console at FOH.

When this mode is active, the mixer DSP on the StudioLive Series III rackmount mixer is bypassed, and the main mix from Front-of-House console mixer is patched directly to the physical Main Left/Right outputs on your rack mixer. The StudioLive Series III console mixer’s FlexMixes are sourced from the rack mixer as described below:

	StudioLive SE 16R or 16R	StudioLive SE 24R or 24R	StudioLive SE 32R or 32R
StudioLive Series III console mixer	FlexMix 1-6	FlexMix 1-12	FlexMix 1-16

It should be noted that even though the StudioLive SE 16, StudioLive 32SC, and 16 console mixers only have 10 outputs, each of these models still has a full 16 Flex Mixes. Using a StudioLive Series III rack mixer of a larger frame size will provide physical outputs for those mixes.

When Network is selected as the Input Source for any channel on the console mixer, you can remotely control the preamp gain and phantom power for the respective channel on the rack mixer.

Note: *While in Stagebox Mode, you will not have access to any function in Universal Control for your rack mixer.*

Monitor Mixer

While this mode is active, the StudioLive Series III rackmount mixer retains all its mixing functionality for every FlexMix, allowing you to create monitor mixes and more using the FlexMix outputs. The Main Mix in this mode will not be accessible or have any effect on the sound as this mix is sourced from the Main Left/Right mix of the console mixer and must be controlled from there.

Power User Tip: *The FlexMix outputs on your console mixer will remain active as well, allowing you to use both sets of FlexMix outputs and, in effect, doubling your mixing capability.*

When Monitor Mix mode is active, preamp gain and phantom power control can be controlled locally on the rack mixer from Universal Control or remotely via the Input section on the Fat Channel of the console mixer when Network is selected as the Input Source, depending on how Preamp Permissions are configured.

2 Getting Started

Connect your StudioLive rack mixer to your StudioLive console mixer either using an AVB switch or connected directly as shown below:

Direct connection

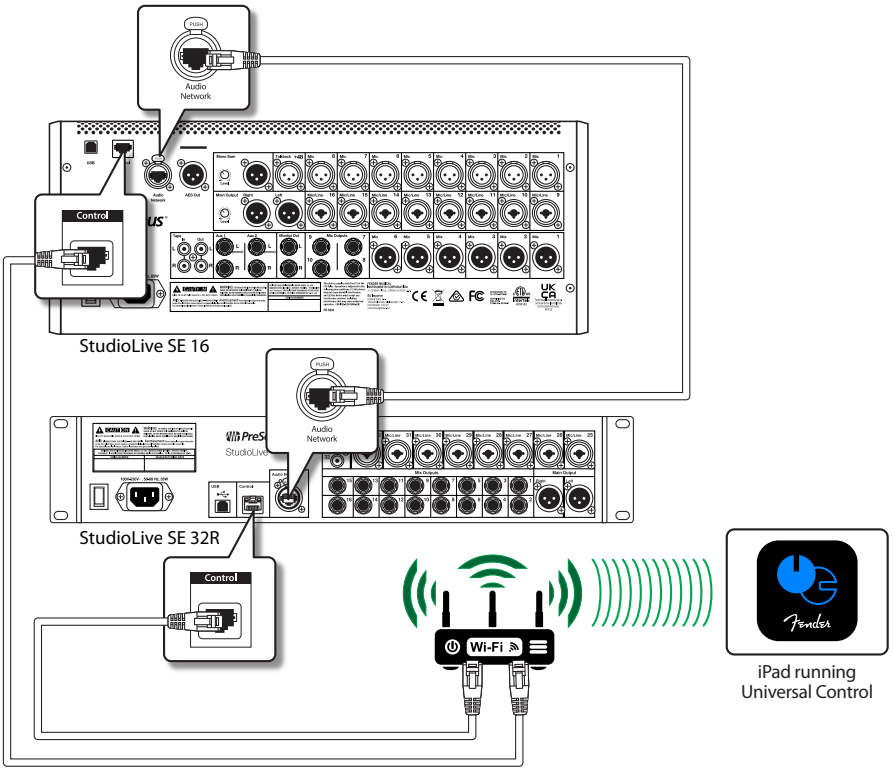

Connect using an AVB switch

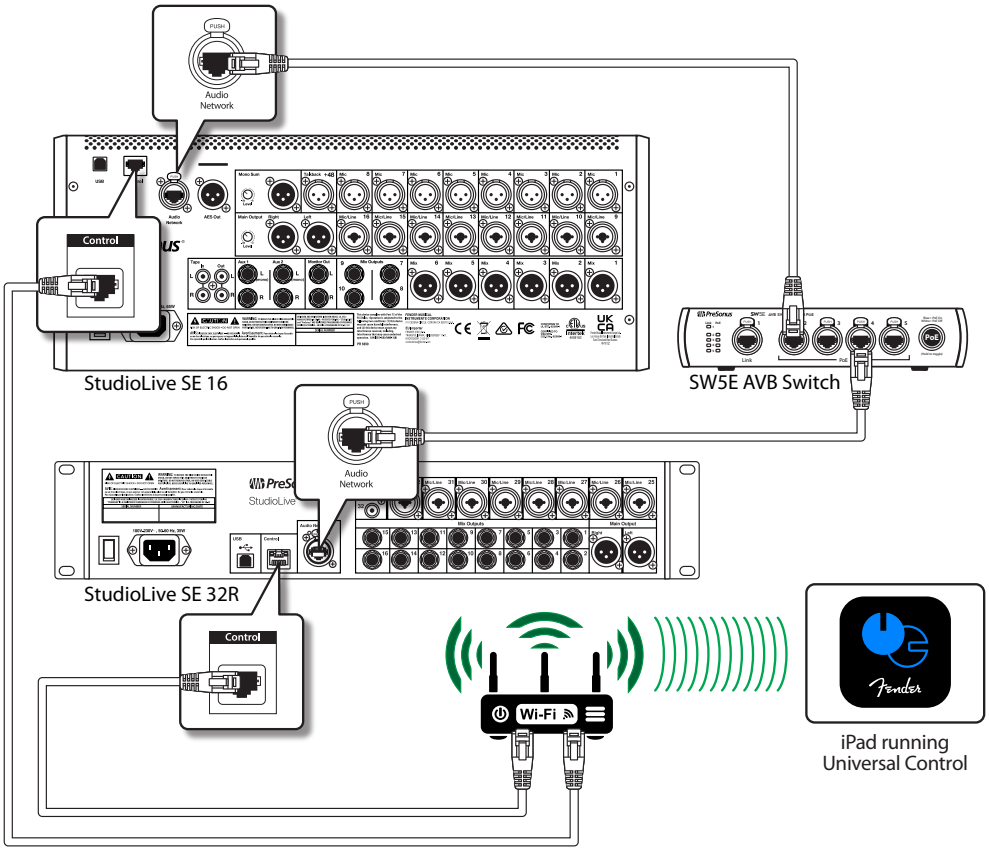

After you have made all the physical connections, you'll need to make the digital network connections.

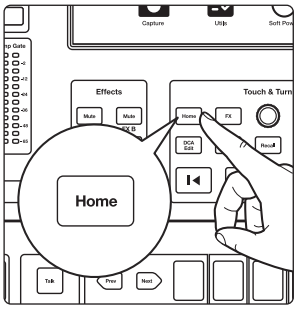

1. Press the Home button on your StudioLive Series III console.

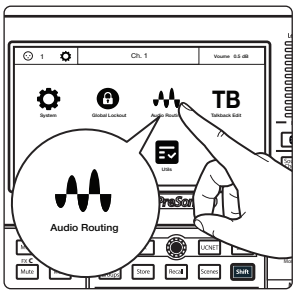

2. Press Audio Routing on the Home Screen.

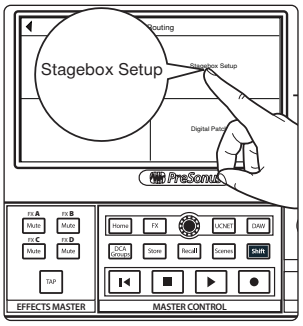

3. Press the Remote I/O Setup button on the screen.

4. Select your rack mixer from the list at the left.

   If you have more than one rack mixer connected to the network and are unsure which mixer is which, you can press the Identify button. This will flash the front panel LEDs on whichever mixer is currently selected.

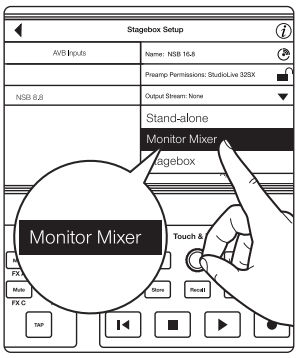

5. Select the Mode you would like to use. ***See Section 1.5*** for information on the different modes.

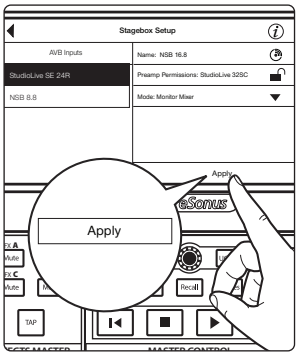

6. Tap Apply to save the mode.

   Power User Tip: *Connecting to your mixer and selecting the mode can be one or two steps. When Apply is pressed, both the selected mixer for preamp permissions and the selected Stagebox Mode are saved simultaneously.*

2.1 Preamp Permissions

The preamps on StudioLive rackmount mixer can be controlled from any StudioLive Series III mixer on the network. When you have a StudioLive rackmount mixer in monitor mix mode feeding more than one mixer, it is recommended that you give only one mixer permission to adjust the StudioLive rackmount mixer preamp levels.

Setting Preamp Permissions on the Console Mixer

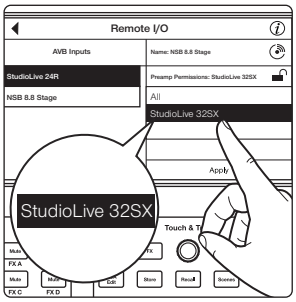

From the Remote I/O menu, select your rackmount mixer and then tap the arrow next to Preamp Permissions menu to select the mixer from which you would like to control your StudioLive rackmount mixer preamps.

Setting Preamp Permissions on Universal Control

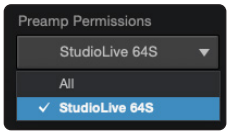

Preamp permissions can also be set from the Stagebox Setup area on the Network tab in the Settings menu in Universal Control.

2.2 Routing AVB Inputs

StudioLive Series III mixers route channels in banks of 8. Once Monitor Mixer has been enabled, your mixers will be auto-configured as follows:

StudioLive SE 32R, SE 24R, 32R, and 24R:

- **Stage Box Mode.** Inputs 1-32 will be routed between the two networked mixers so that they are available on both. The Main Mix and Flex Mixes**.** 1-16 will be routed from the console mixer to the rack mixer.
- **Monitor Mixer Mode.** Inputs 1-32 will be routed between the two networked mixers so that they are available on both. The Main Mix and will be routed from the console mixer to the rack mixer but the Flex Mixes will remain local to each mixer.

StudioLive SE 16R and 16R:

- **Stage Box Mode.** Inputs 1-16 will be routed between the two networked mixers so that they are available on both. The Main Mix and Flex Mixes. 1-6 will be routed from the console mixer to the rack mixer.
- **Monitor Mixer Mode.** Inputs 1-16 will be routed between the two networked mixers so that they are available on both. The Main Mix and will be routed from the console mixer to the rack mixer, but the Flex Mixes will remain local to each mixer.

Note: *Once channels have been patched between your StudioLive Series III rackmount mixer to your StudioLive Series III console mixer, they can be accessed by selecting the Network input as the source on either mixer. For example, if you would like Channel 1 on your console mixer to be sourced from Channel 1 on your rack mixer, you must select Network as the input source on your console mixer. In this way, you can access local analog, network, USB, or SD input sources for each channel as needed*

Select Network on Console

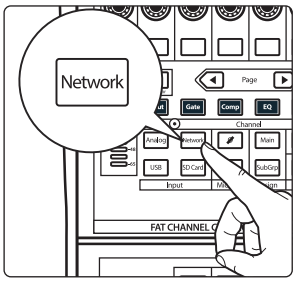

If you would like the input source for any channel on your StudioLive Series III console mixer to come from your StudioLive Series III rack mixer, select that channel on your console mixer and enable Network as the Input Source. For example, if you would like to use the guitar connected to Input 3 on your StudioLive 16R in any mix on your StudioLive SE 32, you would select Channel 3 on your StudioLive SE 32 and enable Network as the input source.

Select Network in Universal Control

If you would like the input source for any channel on your StudioLive Series III rack mixer to come from your StudioLive Series III console mixer, select that channel on your rack mixer in Universal Control and enable Network as the Input Source. For example, if you would like to use the microphone connected to Input 30 on your StudioLive SE 32 in any mix on your StudioLive 32R, you would select Channel 30 in Universal Control for your StudioLive 32R and enable Network as the input source.

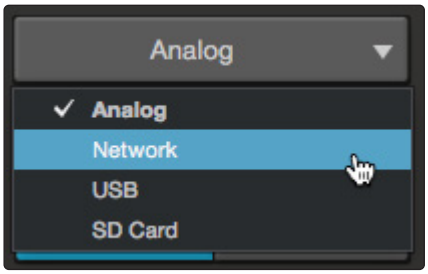

2.2.1 Editing Default AVB Inputs

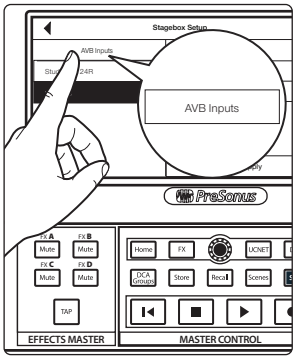

To edit the default setting, press the AVB Inputs button on the Touchscreen.

This will open the AVB Input Streams menu.

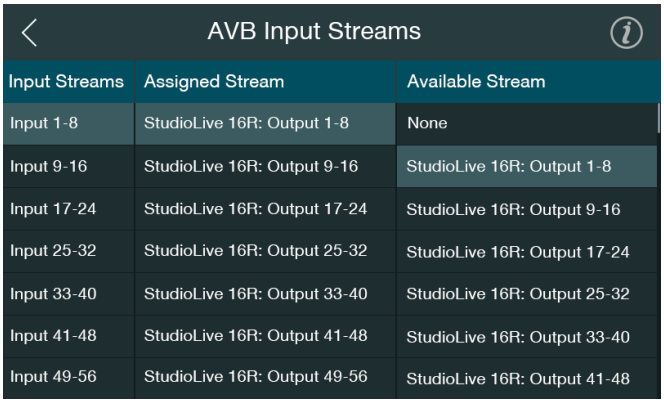

AVB Input Streams

Input Streams	Assigned Stream	Available Stream
Input 1-8	StudioLive 16R: Output 1-8	None
Input 9-16	StudioLive 16R: Output 9-16	StudioLive 16R: Output 1-8
Input 17-24	StudioLive 16R: Output 17-24	StudioLive 16R: Output 9-16
Input 25-32	StudioLive 16R: Output 25-32	StudioLive 16R: Output 17-24
Input 33-40	StudioLive 16R: Output 33-40	StudioLive 16R: Output 25-32
Input 41-48	StudioLive 16R: Output 41-48	StudioLive 16R: Output 33-40
Input 49-56	StudioLive 16R: Output 49-56	StudioLive 16R: Output 41-48

To change a routing, press the Input Stream to which you'd like to route and then use the value encoder to scroll through the Available Streams list on the right. Tap on the desired routing to patch it.

Once an AVB Output Stream from the rackmount mixer is routed to an AVB Input on the console mixer, it cannot be routed to another input stream.

2.3 Preamp Control

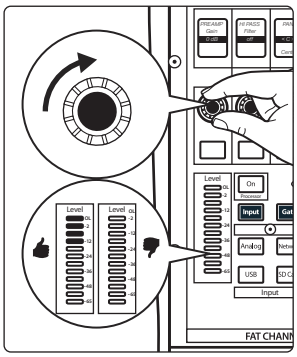

Once the Network input has been selected on the StudioLive Series III console mixer, you can remote control the preamp level and phantom power for your rackmount mixer from the top panel of your console mixer.

Note: *When "Stand-alone" is selected for Stagebox mode, preamp and phantom power control will not be available for remote control. For rack mixer users, these functions must be controlled from Universal Control.*

2.4 Recording

When any Stagebox Mode is active, recording is only supported from the console mixer (USB or SD). Because of this, you will want to configure the channels on your StudioLive Series III console mixer for your recording.

The illustration below shows channels being sourced locally and over the network. Channels 1-12 and 19-24 are sourced from the rack mixer. Channels 13-16 are sourced from the local analog inputs on the console mixer:

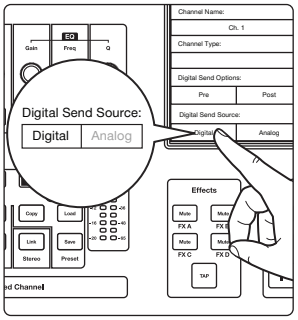

For every channel that you want to source from the Network and record from the console mixer (either USB or SD), you need to set the Digital Send Source to “Digital.” To do this, navigate to the channel settings on the console mixer and enable the Digital Send Source.

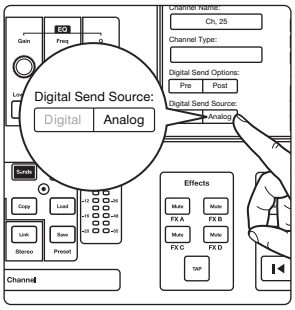

For every channel that you want to source from the local analog inputs and record from the console mixer (either USB or SD), you need to set the Digital Send Source to “Analog.” To do this, navigate to the channel settings on the console mixer and enable the Analog Send Source.

Power User Tip: *The Digital Send behavior follows the channel input source type by default. In other words, if you have a Digital Source selected for a channel, that source will automatically be recorded over USB by that mixer.*

3 Live Setup Example

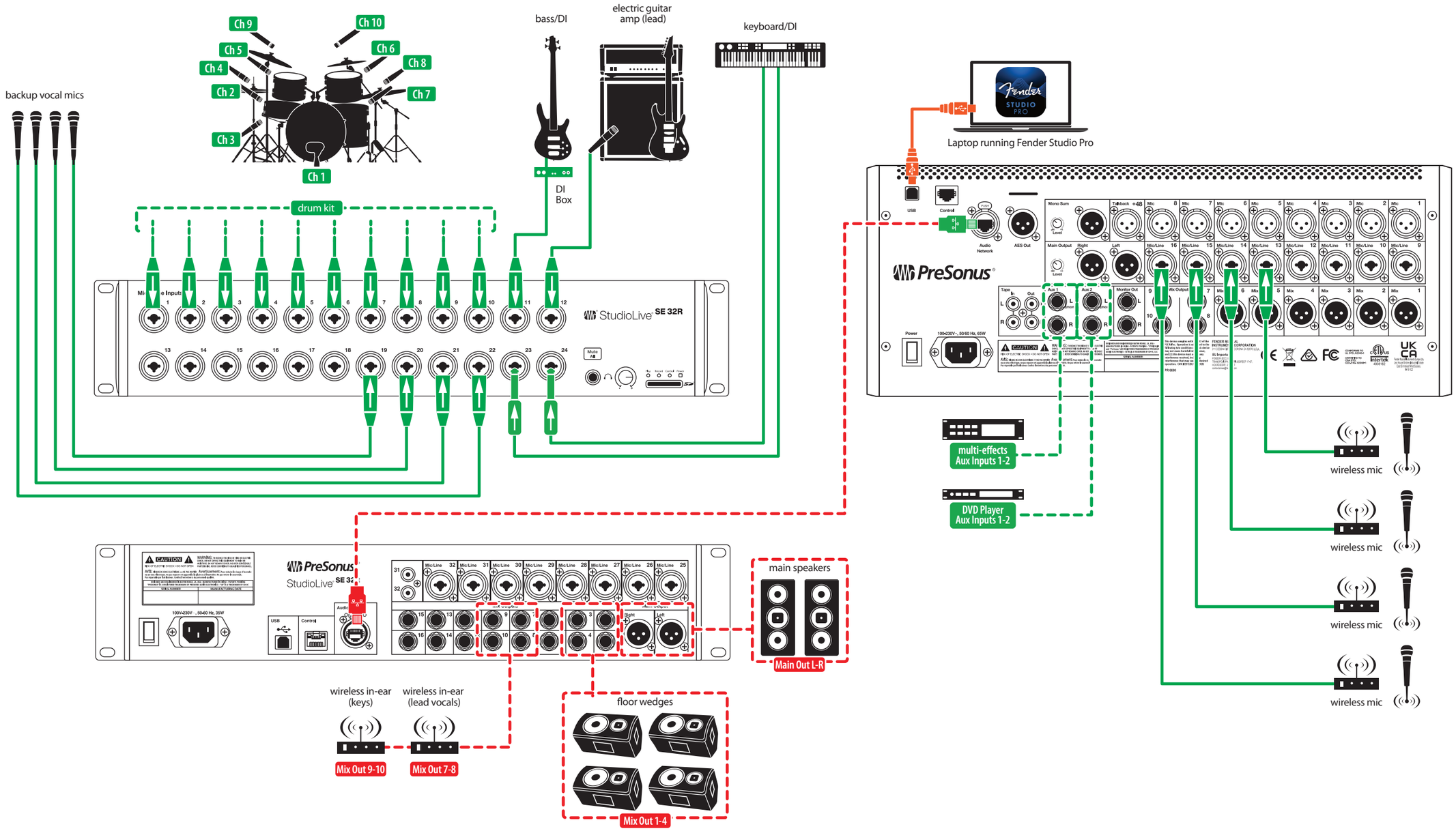

StudioLive® Series III

Stagebox and Monitor Mixer Modes Addendum

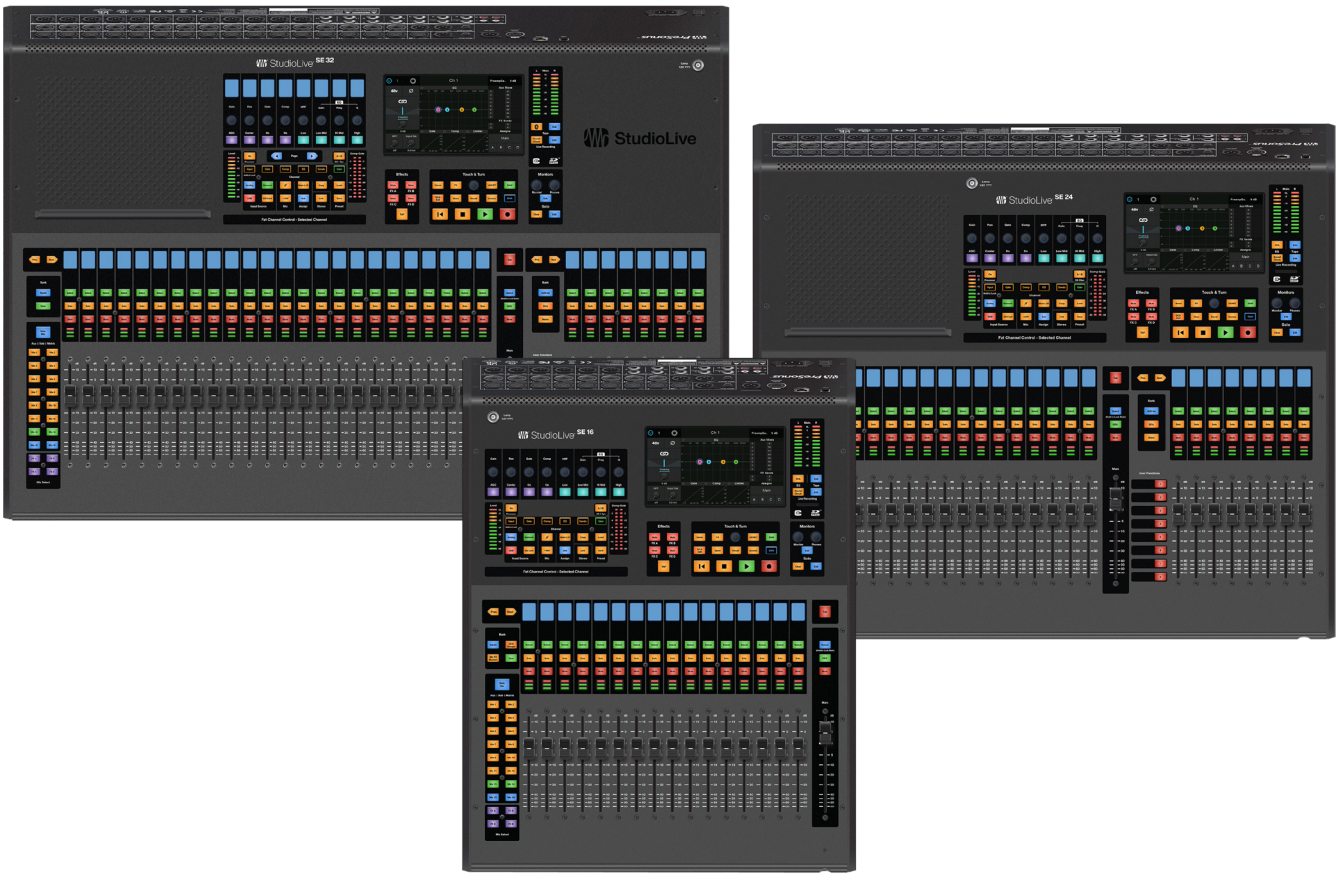

PreSonus®
Baton Rouge ▪ USA
www.presonus.com
Part# 70-22000063-F

©2026 PreSonus Audio Electronics, Inc. All Rights Reserved. PreSonus, the Wave logo, the Studio One Pro logo and StudioLive are registered trademarks of PreSonus Audio Electronics, Inc. and/or its affiliates. Other product names mentioned herein may be trademarks of their respective companies. All specifications subject to change without notice.